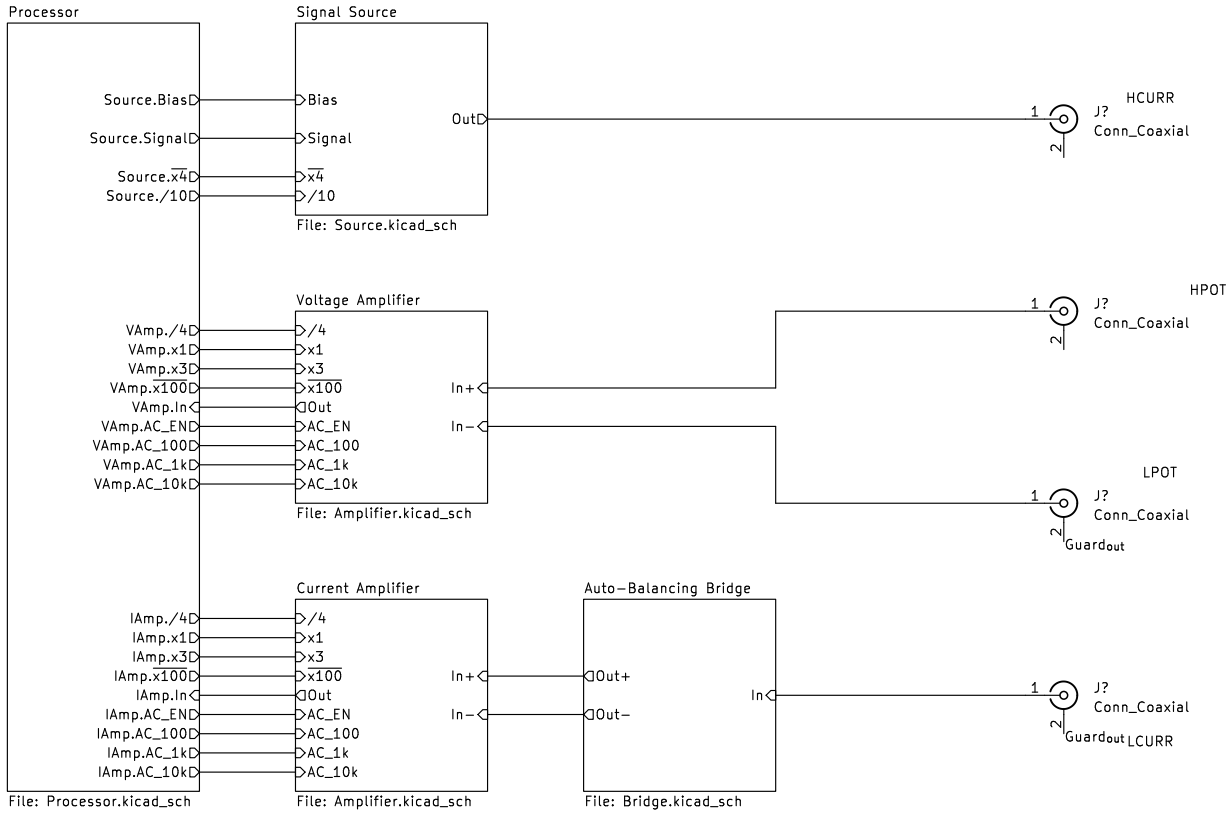

Power

File: Power.kicad_sch

Work in Progress

Harry and Yuki – EEE3 Instrumentation

Sheet: /

File: Main Board.kicad_sch

Title:

Size: A4	Date: 2026−01−26	**Rev: Draft**
KiCad E.D.A. 9.0.7		Id: 1/8

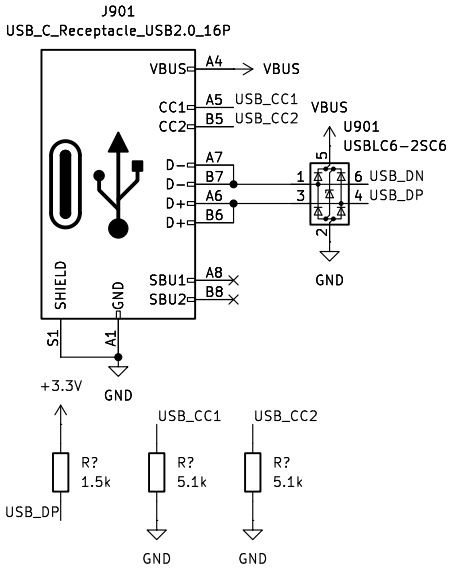

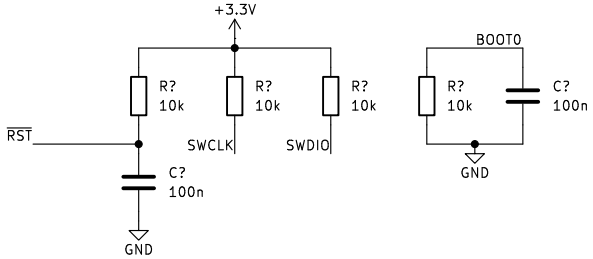

▷Source.Signal
▷Source.Bias
▷Source.x4
▷Source./10

▷VAmp./4
▷VAmp.x1
▷VAmp.x3
▷VAmp.x100
◁VAmp.In
▷VAmp.AC_EN
▷VAmp.AC_100
▷VAmp.AC_1k
▷VAmp.AC_10k

▷IAmp./4
▷IAmp.x1
▷IAmp.x3
▷IAmp.x100
◁IAmp.In
▷IAmp.AC_EN
▷IAmp.AC_100
▷IAmp.AC_1k
▷IAmp.AC_10k

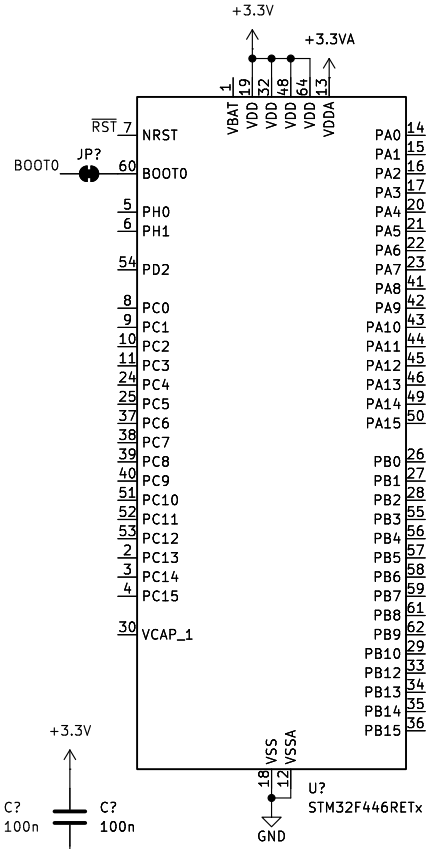

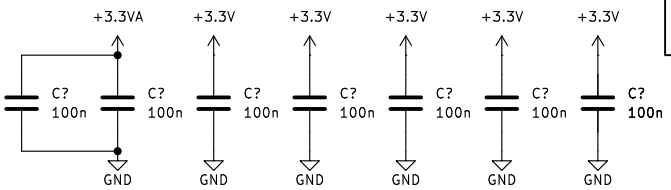

Work in Progress
Harry and Yuki – EEE3 Instrumentation
Sheet: /Processor/
File: Processor.kicad_sch

Title:

Size: A4	Date: 2026-01-26	**Rev: Draft**
KiCad E.D.A. 9.0.7		Id: 2/8

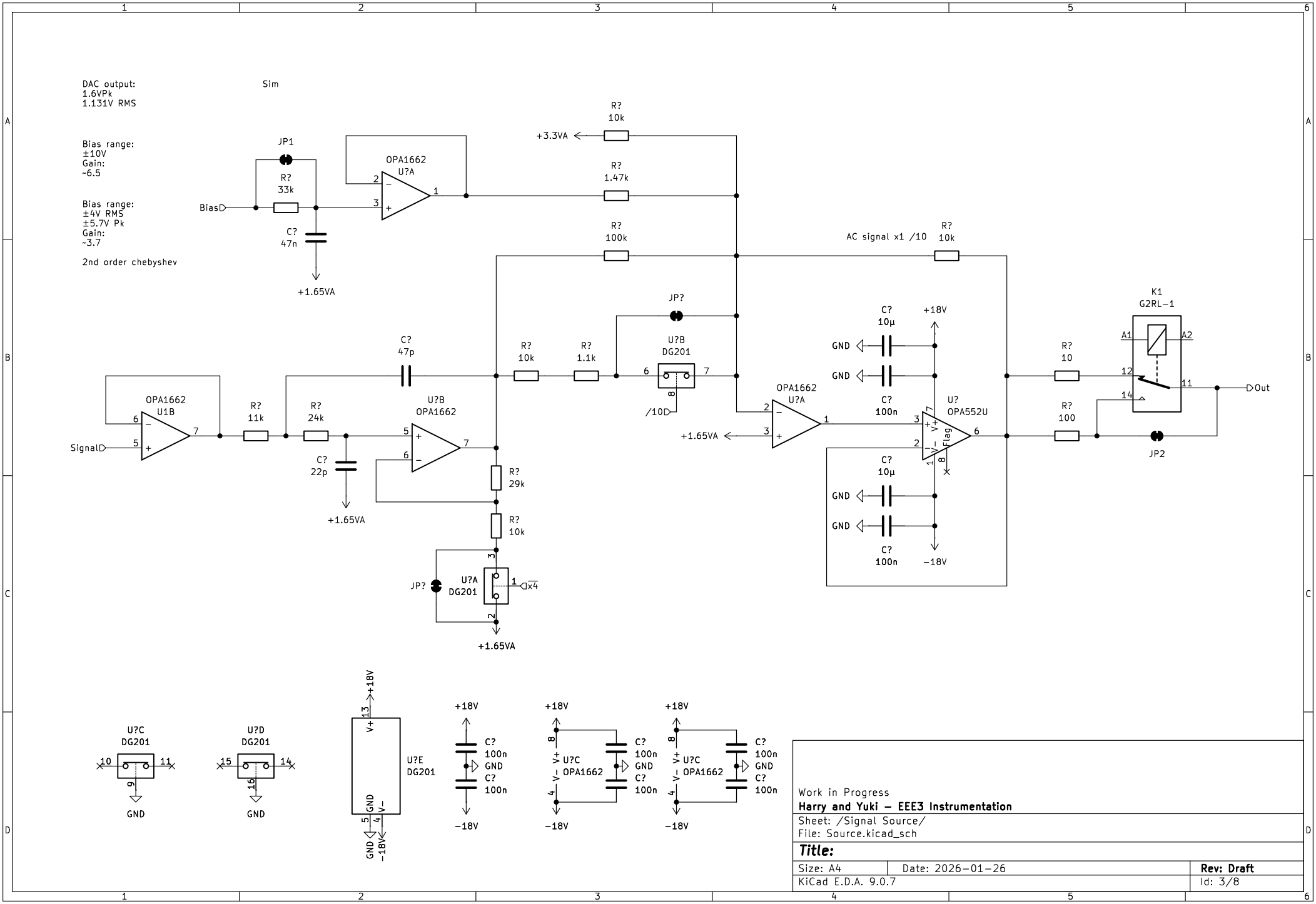

Work in Progress

Harry and Yuki – EEE3 Instrumentation

Sheet: /Signal Source/

File: Source.kicad_sch

Title:

Size: A4	Date: 2026-01-26	**Rev: Draft**
KiCad E.D.A. 9.0.7		Id: 3/8

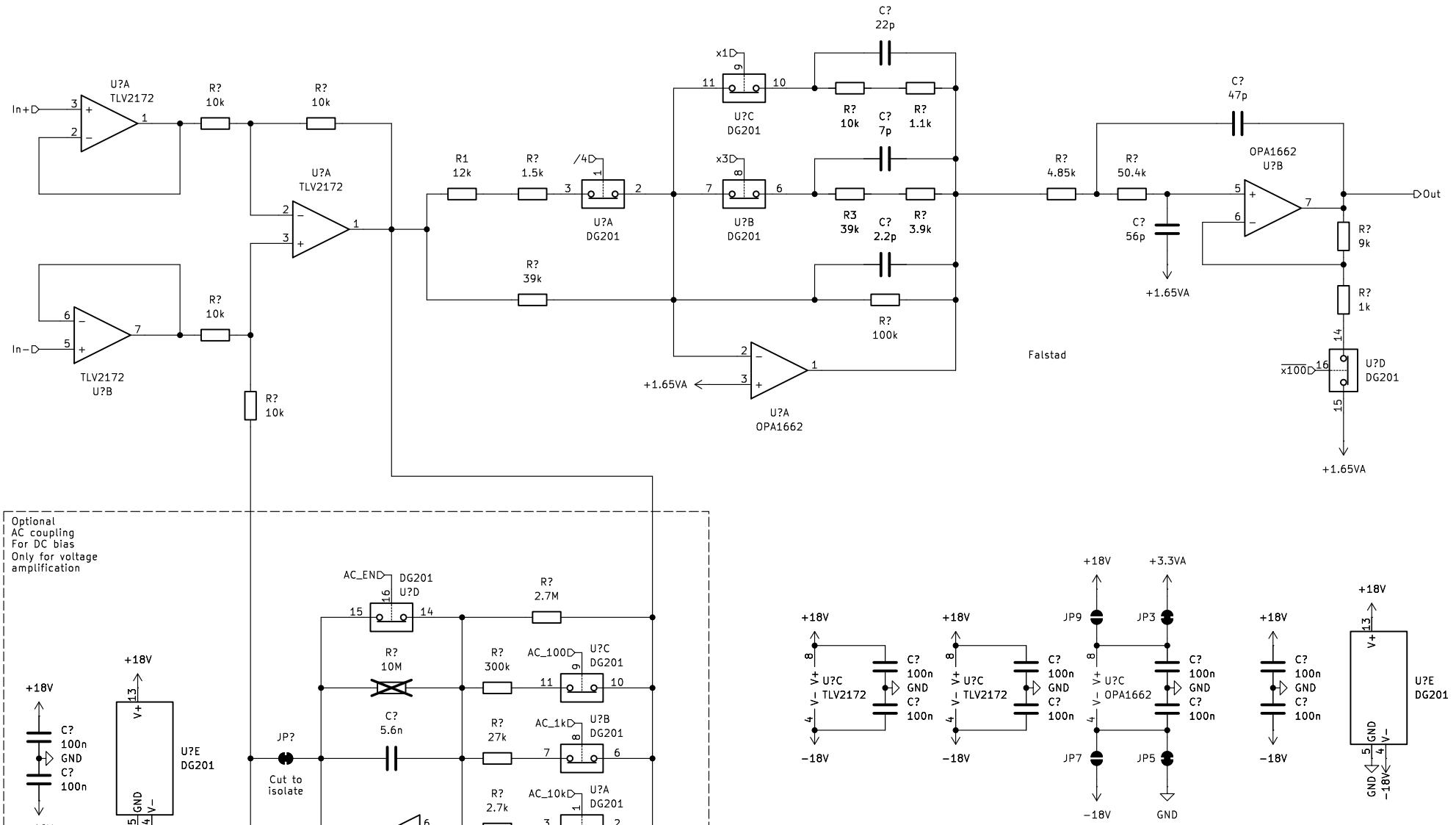

Work in Progress

Harry and Yuki – EEE3 Instrumentation

Sheet: /Voltage Amplifier/

File: Amplifier.kicad_sch

Title: Instrumentation Amplifier

Size: A4	Date: 2026-01-26	**Rev: Draft**
KiCad E.D.A. 9.0.7		Id: 4/8

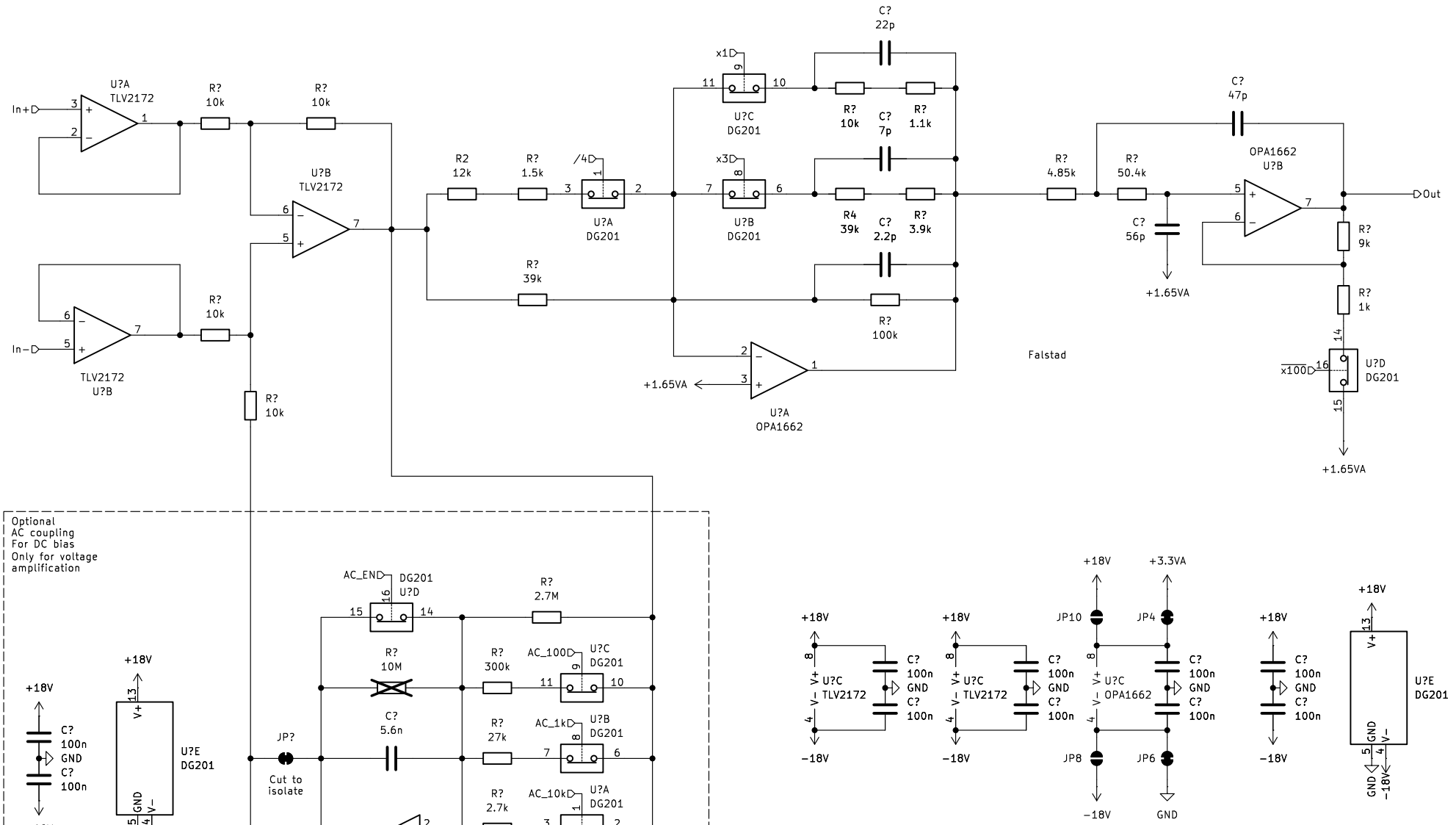

Work in Progress

Harry and Yuki – EEE3 Instrumentation

Sheet: /Current Amplifier/

File: Amplifier.kicad_sch

Title: Instrumentation Amplifier

Size: A4	Date: 2026-01-26	**Rev: Draft**
KiCad E.D.A. 9.0.7		Id: 6/8

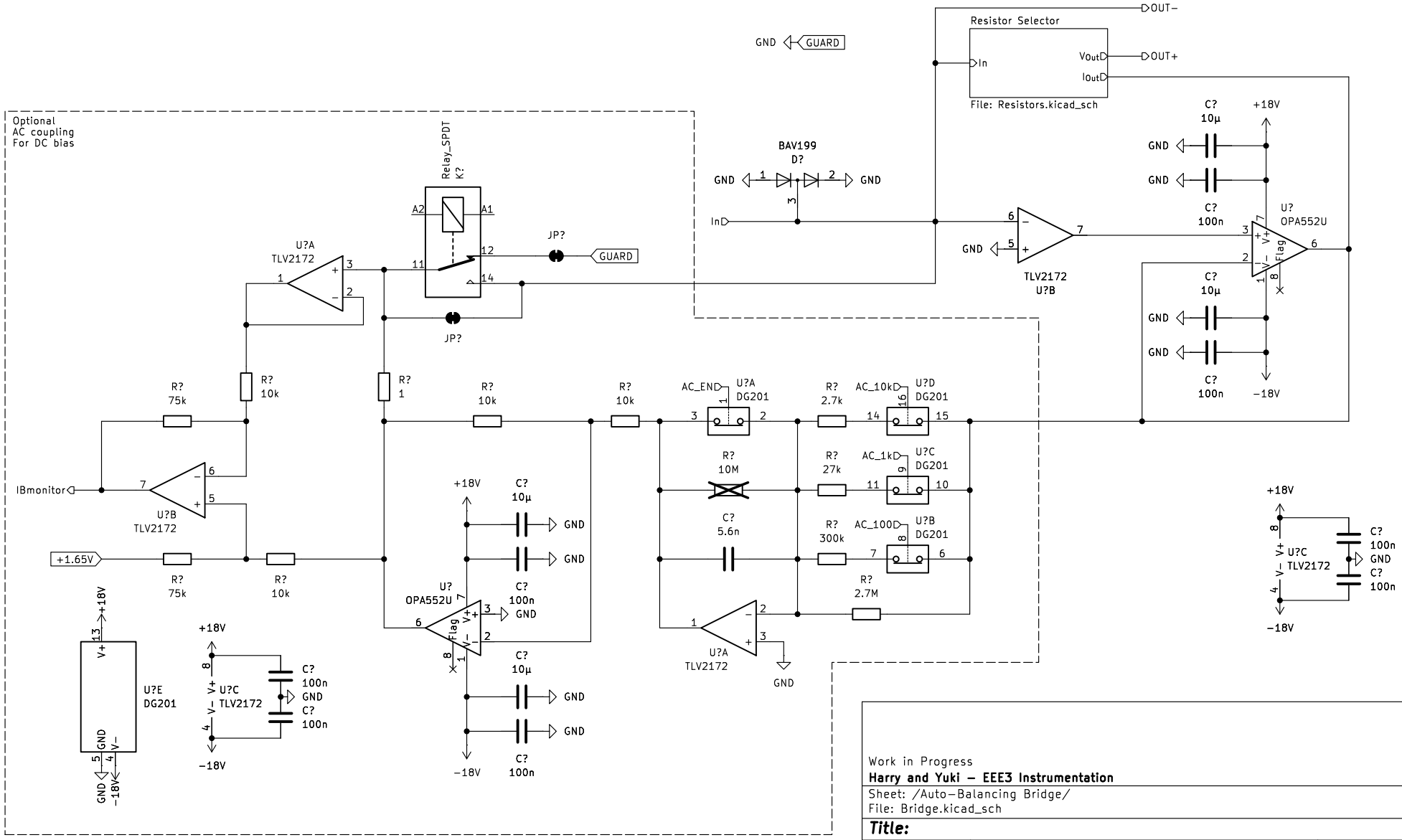

Work in Progress

Harry and Yuki – EEE3 Instrumentation

Sheet: /Auto-Balancing Bridge/

File: Bridge.kicad_sch

Title:

Size: A4	Date: 2026-01-26	**Rev: Draft**
KiCad E.D.A. 9.0.7		Id: 7/8

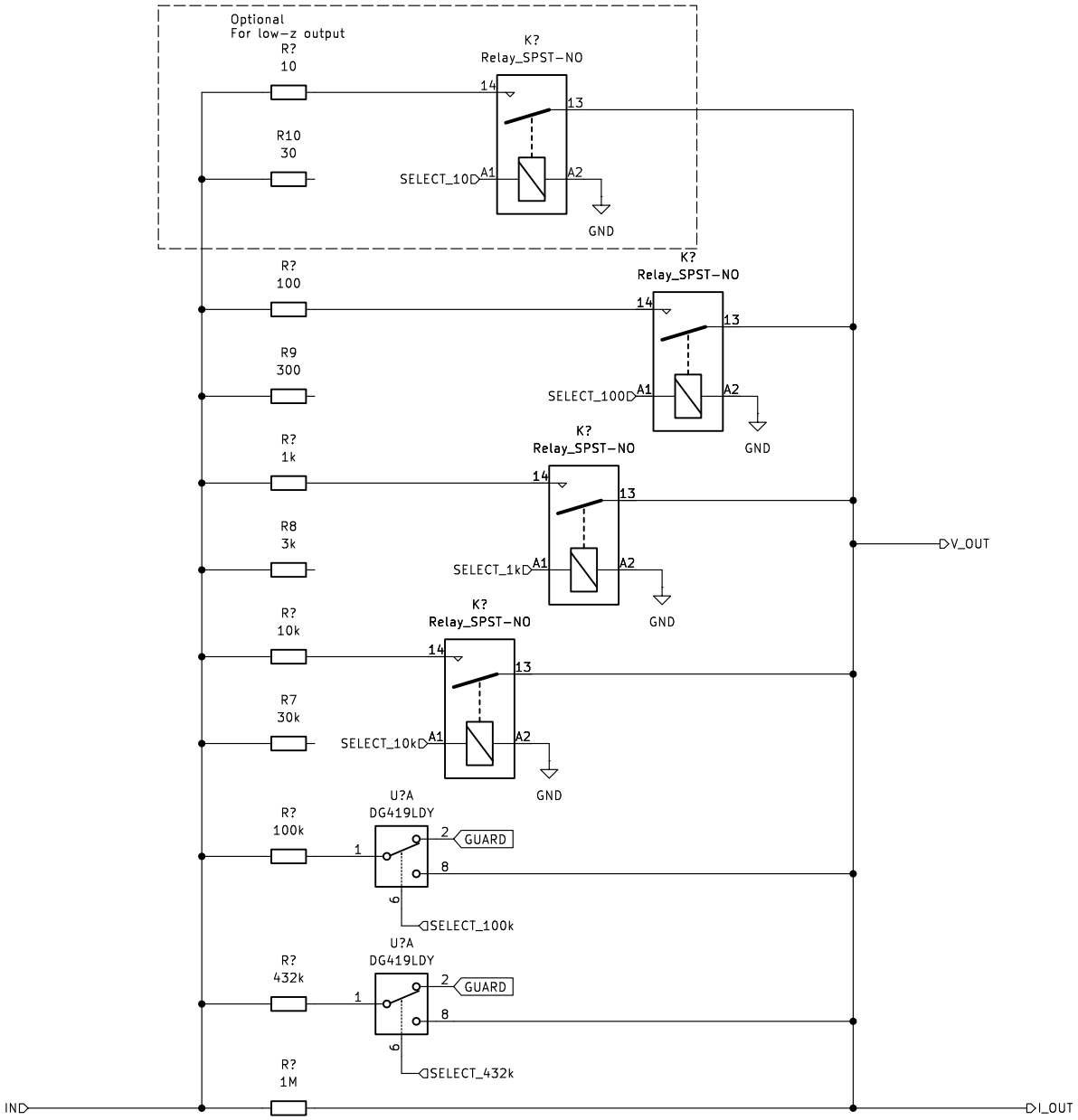

Work in Progress

Harry and Yuki – EEE3 Instrumentation

Sheet: /Auto-Balancing Bridge/Resistor Selector/

File: Resistors.kicad_sch

Title:

Size: A4	Date: 2026-01-26	**Rev: Draft**
KiCad E.D.A. 9.0.7		Id: 8/8

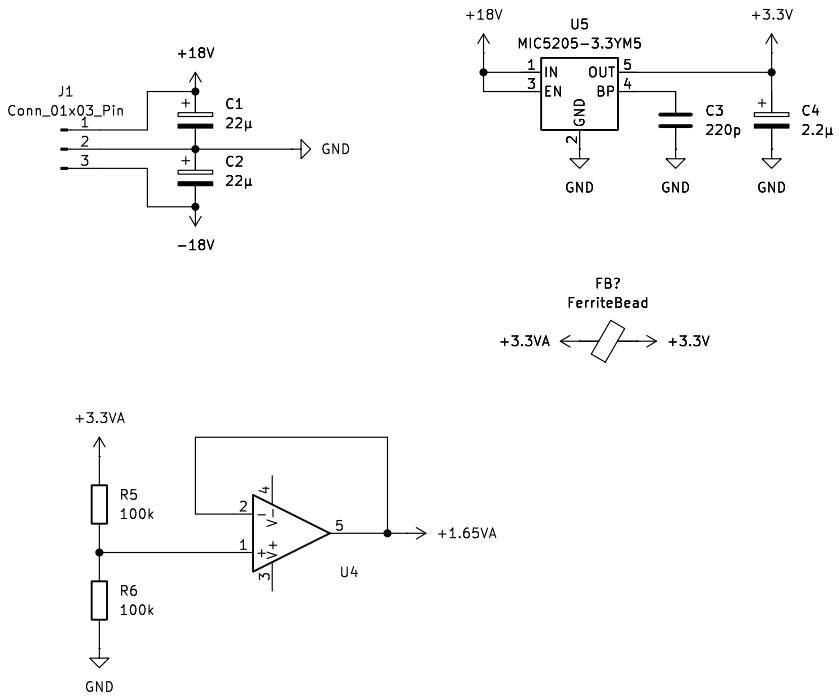

Work in Progress

Harry and Yuki – EEE3 Instrumentation

Sheet: /Power/

File: Power.kicad_sch

Title:

Size: A4	Date: 2026−01−26	**Rev: Draft**
KiCad E.D.A. 9.0.7		Id: 13/8